43 DC Cross Flow Fan

CA Series

●General Specification

●Motor DC single/three phase brushless motor

●Material Frame: Steel / Impeller:Al alloy

●Performance Specification

Model	Size A	Size B	Size C	Rated Voltage	Rated Current	Rated Speed	Maximum Air Flow		Maximum Static Pressure		Sound Level	P-Q Curve
No.	mm			V	A	RPM	m³/h	CFM	Pa	In-H₂O	dBA	No.
CAD43090B12M	145	108	98	12	0.12	3000	43	25.3	20	0.079	36	①
CAD43090B24M				24	0.07	3000	43	25.3	20	0.079	36	①
CAD43150B12M	210	170	160	12	0.18	2700	75	44.1	12	0.047	37	②
CAD43150B24M				24	0.10	2700	75	44.1	12	0.047	37	②
CAD43190B12M	230	208	198	12	0.20	2500	95	55.9	11	0.043	39	①
CAD43190B24M				24	0.12	2500	95	55.9	11	0.043	39	①
CAD43250B12M	300	160	250	12	0.23	2400	102	60.0	10	0.039	40	②
CAD43250B24M				24	0.13	2400	102	60.0	10	0.039	40	②
CAD43290B12M	352	310	300	12	0.26	2300	120	70.6	8	0.031	41	①
CAD43290B24M				24	0.14	2300	120	70.6	8	0.031	41	①
CAD43350B12M	417	358	348	12	0.29	2100	138	81.2	12	0.047	41	②
CAD43350B24M				24	0.16	2100	138	81.2	12	0.047	41	②
CAD43420B12M	472	430	420	12	0.32	2000	150	88.3	13	0.051	38	③
CAD43420B24M				24	0.17	2000	150	88.3	13	0.051	38	③

● P-Q Curves / P-Q 曲線

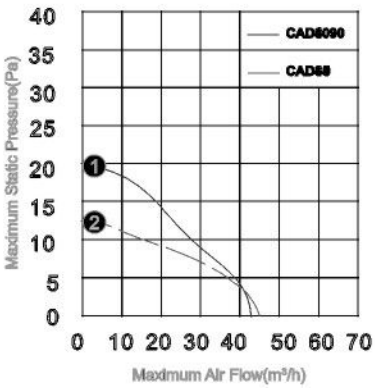

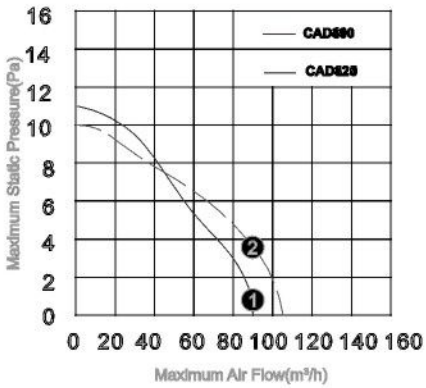

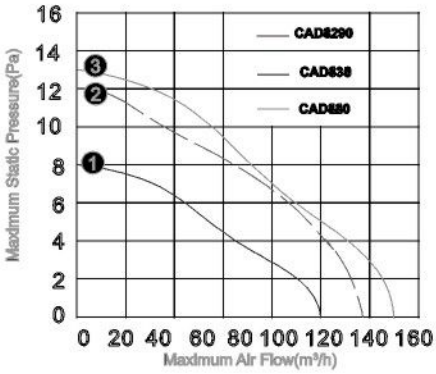

● Drawing

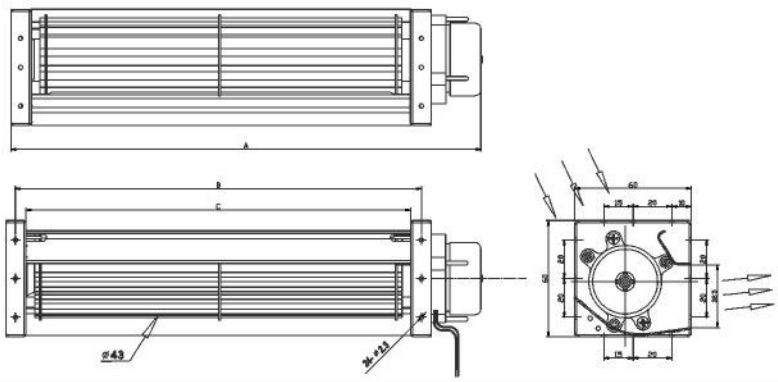

Specification is subject to change for improvement without notice / 基於改良的規格變更，不另行通知