30 DC Cross Flow Fan

CB Series

●General Specification

●Motor DC single phase brushless motor

●Material Frame: Steel / Impeller:Al alloy

●Performance Specification

Model	Size A	Size B	Size C	Rated Voltage	Rated Current	Rated Speed	Maximum Air Flow		Maximum Static Pressure		Sound Level	P-Q Curve
No.	mm			V	A	RPM	m³/h	CFM	Pa	In-H_2O	dBA	No.
CBD30090B12M	143	108	98	12	0.10	3000	35	20.6	17	0.068	29	①
CBD30090B24M				24	0.05	3000	35	20.6	17	0.068	29	①
CBD30150B12M	200	170	160	12	0.12	2800	42	24.7	15	0.060	30	②
CBD30150B24M				24	0.07	2800	42	24.7	15	0.060	30	②
CBD30190B12M	222	208	198	12	0.14	2700	52	30.6	14	0.056	31	①
CBD30190B24M				24	0.08	2700	52	30.6	14	0.056	31	①
CBD30250B12M	293	258	248	12	0.16	2600	65	38.3	14	0.056	32	②
CBD30250B24M				24	0.09	2600	65	38.3	14	0.056	32	②
CBD30290B12M	341	310	300	12	0.18	2500	72	42.4	13	0.052	33	①
CBD30290B24M				24	0.09	2500	72	42.4	13	0.052	33	①
CBD30350B12M	390	362	352	12	0.20	2400	84	49.4	13	0.052	35	②
CBD30350B24M				24	0.10	2400	84	49.4	13	0.052	35	②

● P-Q Curves

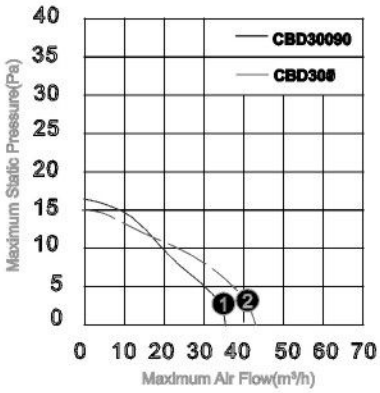

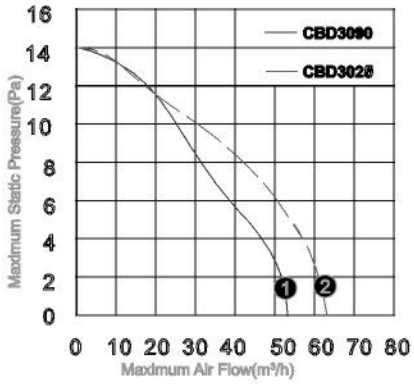

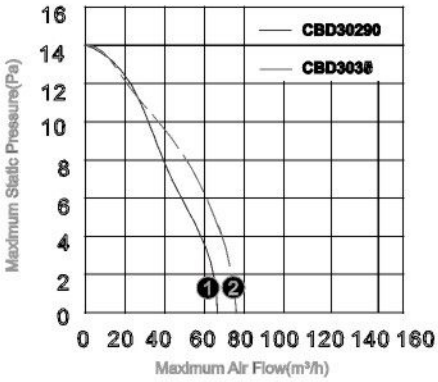

● Drawing

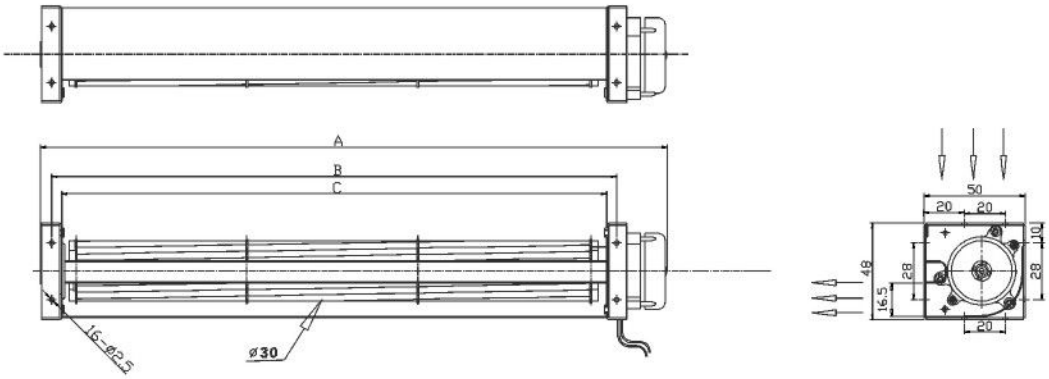

Specification is subject to change for improvement without notice / 基於改良的規格變更，不另行通知